2031682
Chesapeake Curio Cabinet

Parts List

A.	Top Panel	1 pc
B.	Left Side Panel	1 pc
C.	Right Side Panel	1 pc
D.	Back Panel	1 pc
E.	Left Door	1 pc
F.	Right Door	1 pc
G.	Adjustable Shelves	2 pcs
H.	Bottom Assembly	1 pc
I.	Legs	4 pcs
J.	Handles	2 pcs
K.	Shelf Pins	8 pcs
L.	Connecting Bolts	8 pcs
M.	Eccentric Cams	8 pcs
N.	Plastic Covers	8 pcs
O.	Phillips Head Bolts	2 pcs
P.	Allen Head Bolts	8 pcs
Q.	Flat Washers	8 pcs
R.	Lock Washers	8 pcs
S.	Long Phillips Head Screws	8 pcs
T.	Short Phillips Head Screws	14 pcs
U.	Phillips Head Screwdriver	1 pc
V.	Flat Head Screwdriver	1 pc
W.	Allen Head Wrench	1 pc
X.	Tassels	2 pcs

∗ Please make sure that you have all the parts and hardware indicated above before you begin assembly of this item.
∗ Use the hardware illustrations to determine correct piece and size.
∗ This item should be assembled on a soft surface to prevent scratching the finish during assembly.
∗ This item may require periodic tightening.

2031682
Chesapeake Curio Cabinet

Hardware Illustrations

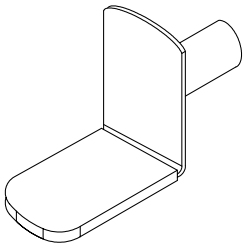

K. Shelf Pin

L. Connecting Bolt

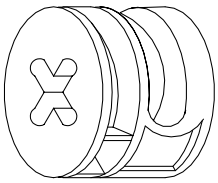

M. Eccentric Cam

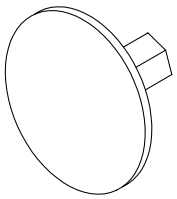

N. Plastic Cover

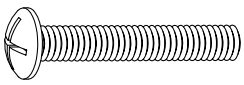

O. Phillips Head Bolt

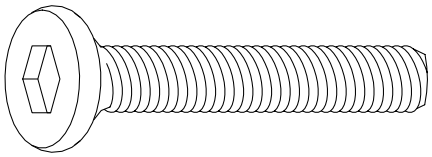

P. Allen Head Bolt

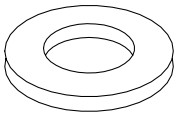

Q. Flat Washer

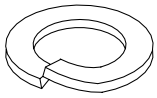

R. Lock Washer

S. Long Phillips Head Screw

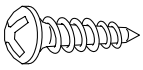

T. Short Phillips Head Screw

2031682
Chesapeake Curio Cabinet

Attach Top Panel & Bottom Assembly& Back Panel

Parts required

A.	Top Panel	1 pc	L.	Connecting Bolts	8 pcs
B.	Left Side Panel	1 pc	M.	Eccentric Cams	8 pcs
C.	Right Side Panel	1 pc	N.	Plastic Covers	8 pcs
D.	Back Panel	1 pc	U.	Phillips Head Screwdriver	1 pc
H.	Bottom Assembly	1 pc	V.	Flat Head Screwdriver	1 pc

1. **Attach Top Panel (A)** Put Top Panel (A) upside down on a soft surface. Insert Connecting Bolts (L) into the pre-threaded holes in the underside of Top Panel (A). Tighten in a clockwise direction using Flat Head Screwdriver (V). Align the Connecting Bolts (L) with the pre-drilled holes in the end of Left & Right Side Panels (B, C). Insert the Eccentric Cams (M) into the pre-drilled holes in the Left & Right Side Panels (B, C). Make sure the groove in the Eccentric Cams (M) faces out and the arrow points towards the Connecting Bolts (L). Use the Phillips Head Screwdriver (U) to adjust the Eccentric Cams (M) and lock the Connecting Bolts (L) in place by turning in a clockwise direction. Cover the Eccentric Cams (M) with Plastic Covers (N). See Illustration #1. **Pre-drilled holes in the edges of Left & Right Side Panels (B, C) and Top Panel (A) should be on the same side in order to attach the Back Panel (D).**
2. **Attach Bottom Assembly (H)** Insert Connecting Bolts (L) into the pre-threaded holes in the Bottom Assembly (H). Tighten in a clockwise direction using Flat Head Screwdriver (V). Align the Connecting Bolts (L) with the pre-drilled holes in the ends of Left & Right Side Panels (B, C). Insert the Eccentric Cams (M) into the pre-drilled holes in the Left & Right Side Panels (B, C). Make sure the groove in the Eccentric Cams (M) faces out and the arrow points towards the Connecting Bolts (L). Use the Phillips Head Screwdriver (U) to adjust the Eccentric Cams (M) and lock the Connecting Bolts (L) in place by turning in a clockwise direction. Cover the Eccentric Cams (M) with Plastic Covers (N). See Illustration #1. **Pre-drilled holes on the edge of Bottom Assembly (H) should face the back of the unit in order to attach the Back Panel (D).**

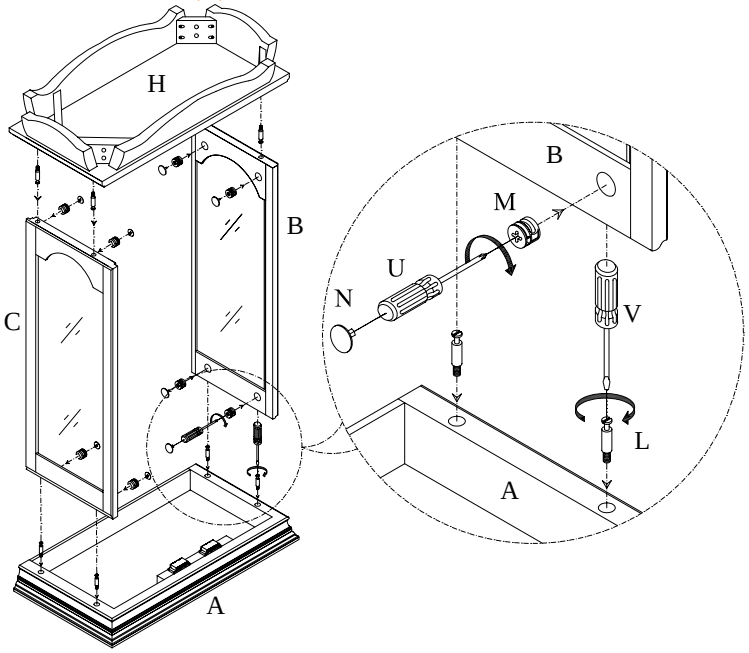

Illustration # 1

2031682
Chesapeake Curio Cabinet

Attach Back Panel

Parts required

A.	Top Panel	1 pc	H.	Bottom Assembly	1 pc
B.	Left Side Panel	1 pc	T.	Short Phillips Head Screws	14 pcs
C.	Right Side Panel	1 pc	U.	Phillips Head Screwdriver	1 pc
D.	Back Panel	1 pc			

3. **Attach Back Panel (D)** Align the pre-drilled holes in the Back Panel (D) with the pre-threaded holes in the edge of Top Panel (A), Left & Right Side Panels (B, C) and Bottom Assembly (H). Secure with Short Phillips Head Screws (T) using Phillips Head Screwdriver (U). See Illustration # 2.

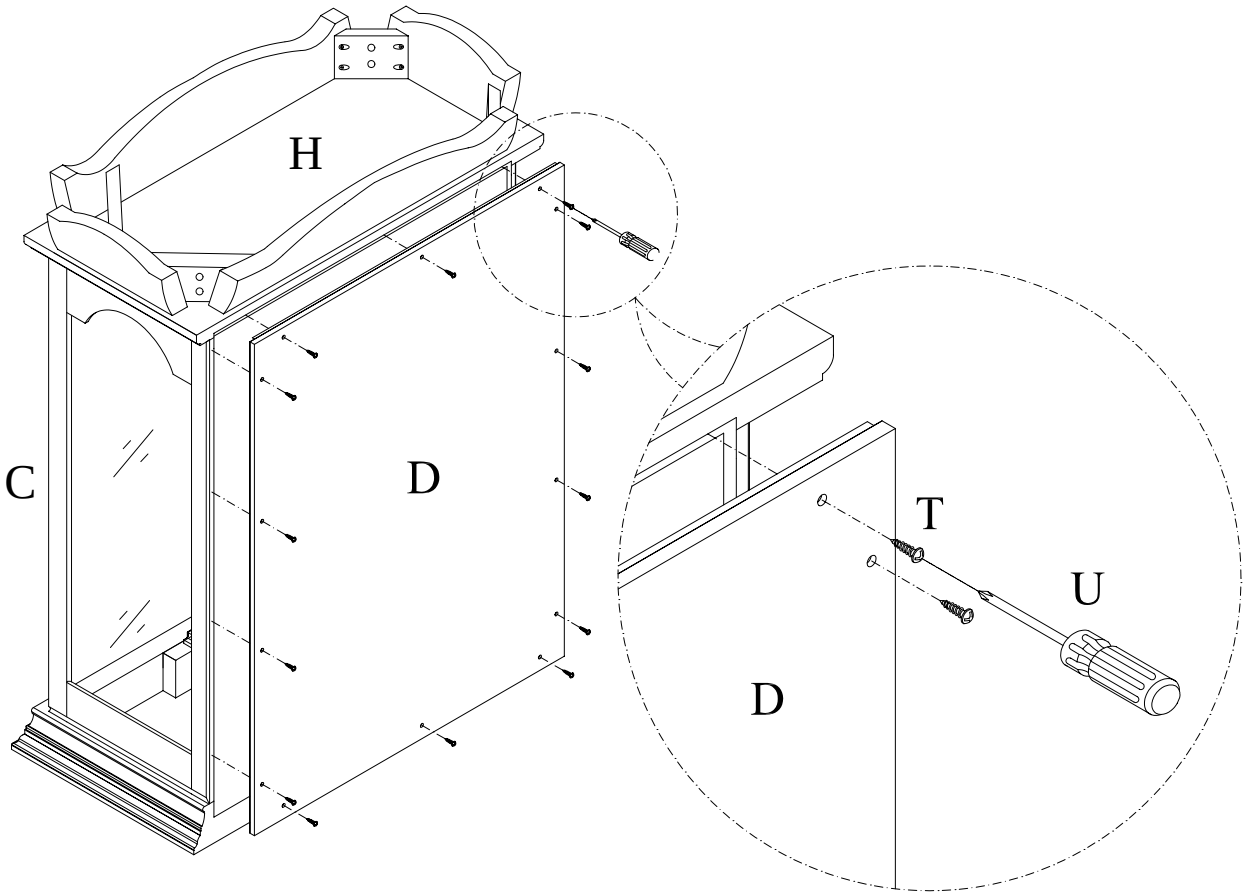

Illustration # 2

2031682
Chesapeake Curio Cabinet

Attach Legs

Parts required

H.	Bottom Assembly	1 pc	Q.	Flat Washers	8 pcs
I.	Legs	4 pcs	R.	Lock Washers	8 pcs
P.	Allen Head Bolts	8 pcs	W.	Allen Head Wrench	1 pc

4. **Attach Legs (I)** Put Bottom Assembly (H) upside down on a soft surface. Align the pre-threaded holes in the Legs (I) with the pre-drilled holes in the corner blocks of Bottom Assembly (H). Secure with Allen Head Bolts (P), Lock Washers (R) and Flat Washers (Q) using Allen Head Wrench (W). See illustration #3.

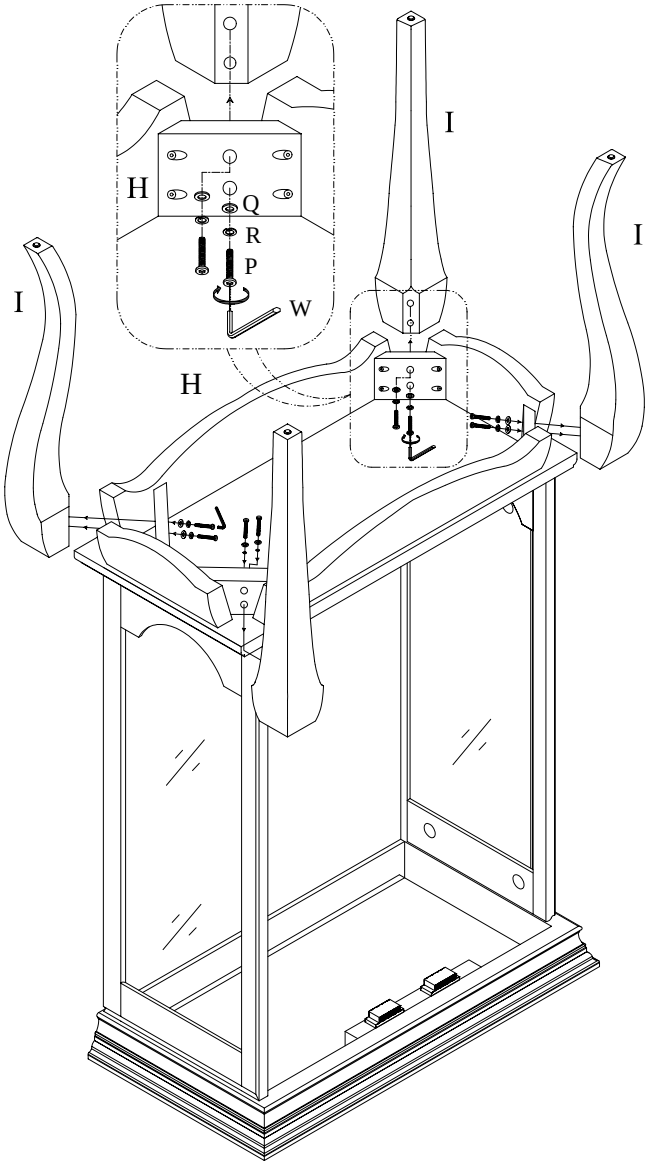

Illustration # 3

2031682
Chesapeake Curio Cabinet

Attach Doors, Adjustable Shelves and Handles

Parts required

B.	Left Side Panel	1 pc	K.	Shelf Pins	8 pcs
C.	Right Side Panel	1 pc	O.	Phillips Head Bolts	2 pcs
E.	Left Door	1 pc	S.	Long Phillips Head Screws	8 pcs
F.	Right Door	1 pc	U.	Phillips Head Screwdriver	1 pc
G.	Adjustable Shelves	2 pcs	X.	Tassels	2 pcs
J.	Handles	2 pcs			

5. **Turn the item upright.**
6. **Attach Left & Right Doors (E, F)** Align the pre-drilled holes in the hinges of Left & Right Doors (E, F) with the pre-threaded holes in the Left & Right Side Panels (B, C). Secure with Long Phillips Head Screws (S) using Phillips Head Screwdriver (U). See Illustration #4.
7. **Attach Handles (J) and Adjustable Shelves (G)** Align the pre-threaded holes in the Handles (J) with the pre-drilled holes in the Left & Right Doors (E, F). Secure with Phillips Head Bolts (O) using Phillips Head Screwdriver (U). Tie the tassels (X) to Handles (J). Insert Shelf Pins (K) into the desired pre-drilled holes in the Left & Right Side Panels (B, C). Put the Adjustable Shelves on the Shelf Pins (K). See Illustration #4.

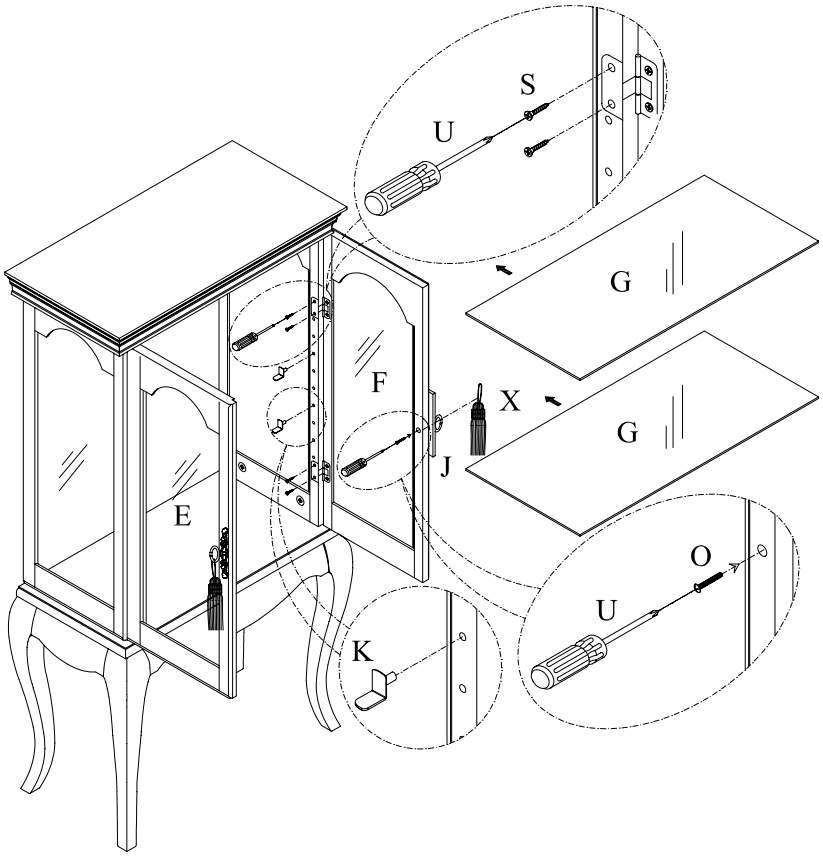

Illustration # 4